

STANDARD.

Refine Room Schedulers

Designed for seamless integration, our room scheduler solutions work with all Infinium door types and can accommodate a range of devices and mounting brackets. Details are illustrated using our double-glazed, aluminum-framed door.

Components may be factory prepped for simple, clean assembly—a proven method we've been incorporating for decades. Exact locations are coordinated with our in-house project management team to ensure precise fit and streamlined installation.

OPTION 1 Wire In Panel Vertical | **OPTION 2** Wire In Raceway

DETAILS.

Standard Room Schedulers

REFINE SINGLE-GLAZED UNITIZED

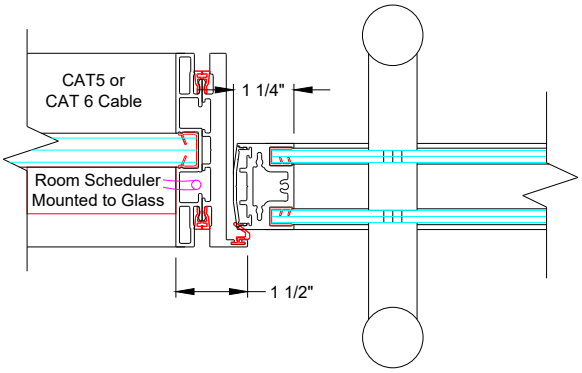

STANDARD OPTION 1

Wire In Panel Vertical

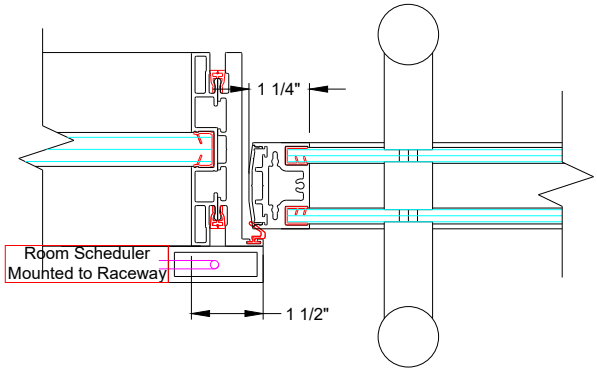

STANDARD OPTION 2

Wire In Raceway

REFINE DOUBLE-GLAZED UNITIZED

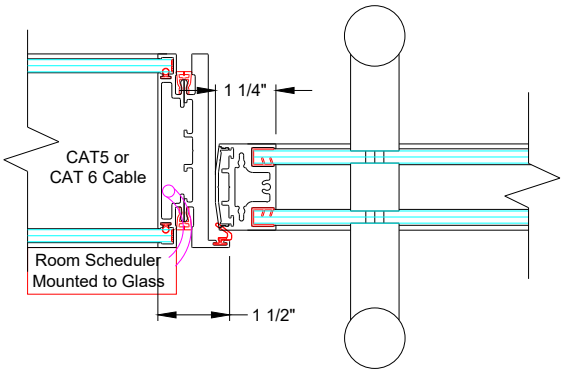

STANDARD OPTION 1

Wire In Panel Vertical

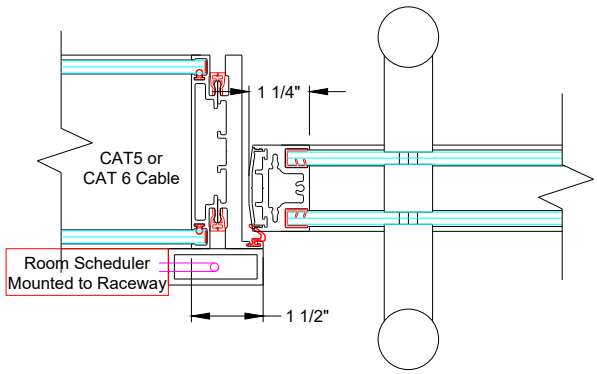

STANDARD OPTION 2

Wire In Raceway

Refine extrusion profiles and glass configurations are subject to change based on the wall system & door selected.

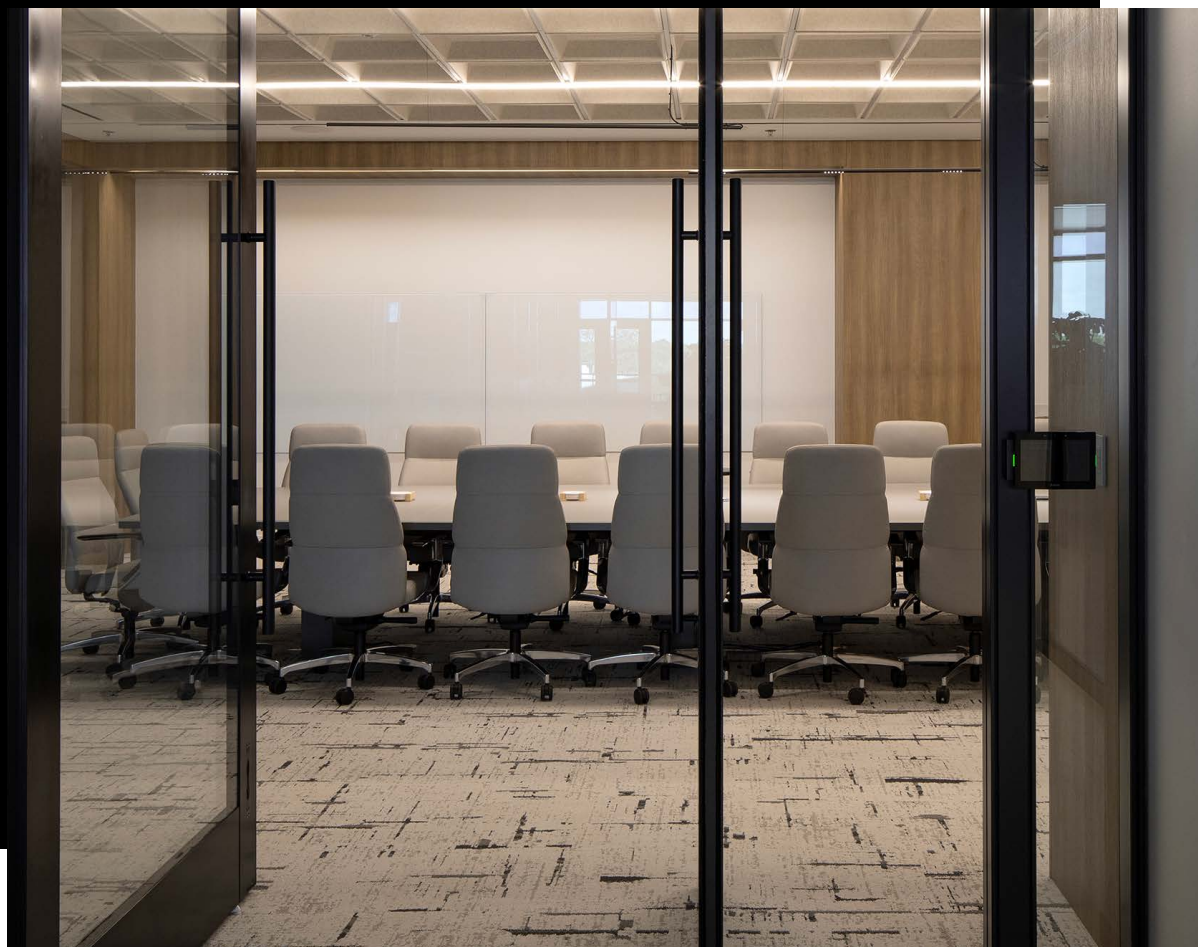

PREMIUM.

Refine Room Schedulers

Designed for seamless integration, our room scheduler solutions work with all Infinium door types and can accommodate a range of devices and mounting brackets. Details are illustrated using our double-glazed, aluminum-framed door.

Components may be factory prepped for simple, clean assembly—a proven method we've been incorporating for decades. Exact locations are coordinated with our in-house project management team to ensure precise fit and streamlined installation.

OPTION 1 Wire In Post | **OPTION 2** Wire In Tech Panel

DETAILS.

Premium Room Schedulers

REFINE SINGLE-GLAZED UNITIZED

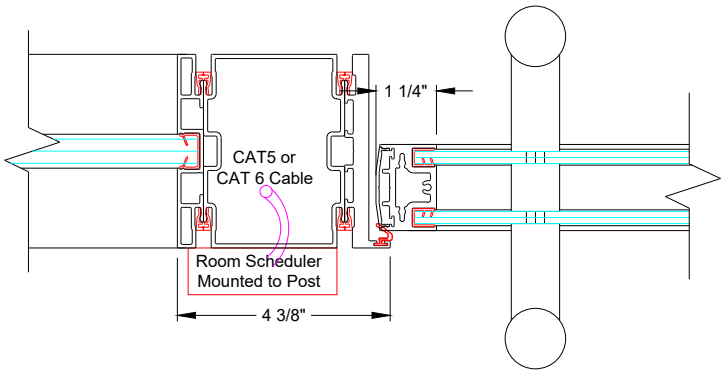

PREMIUM OPTION 1

Wire In Post

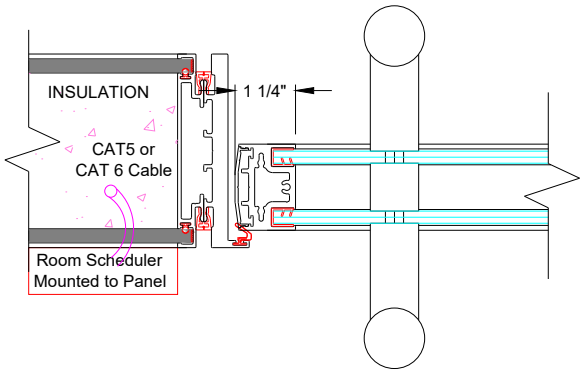

PREMIUM OPTION 2

Wire In Tech Panel

REFINE DOUBLE-GLAZED UNITIZED

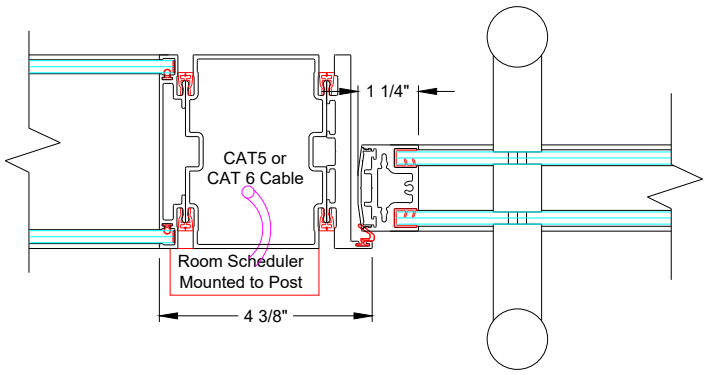

PREMIUM OPTION 1

Wire In Post

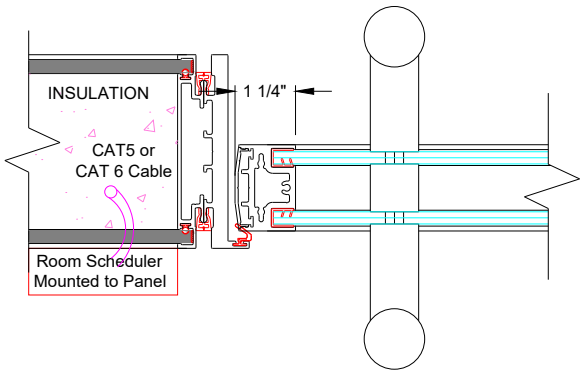

PREMIUM OPTION 2

Wire In Tech Panel

Refine extrusion profiles and glass configurations are subject to change based on the wall system & door selected.